ngt new gas technologies
Synthesis

Methaforming - 6

Processing Unit for up to 6 000 tpa (150 bpd) of Hydrocarbon Feed

Profit from Small Scale Naphtha Streams

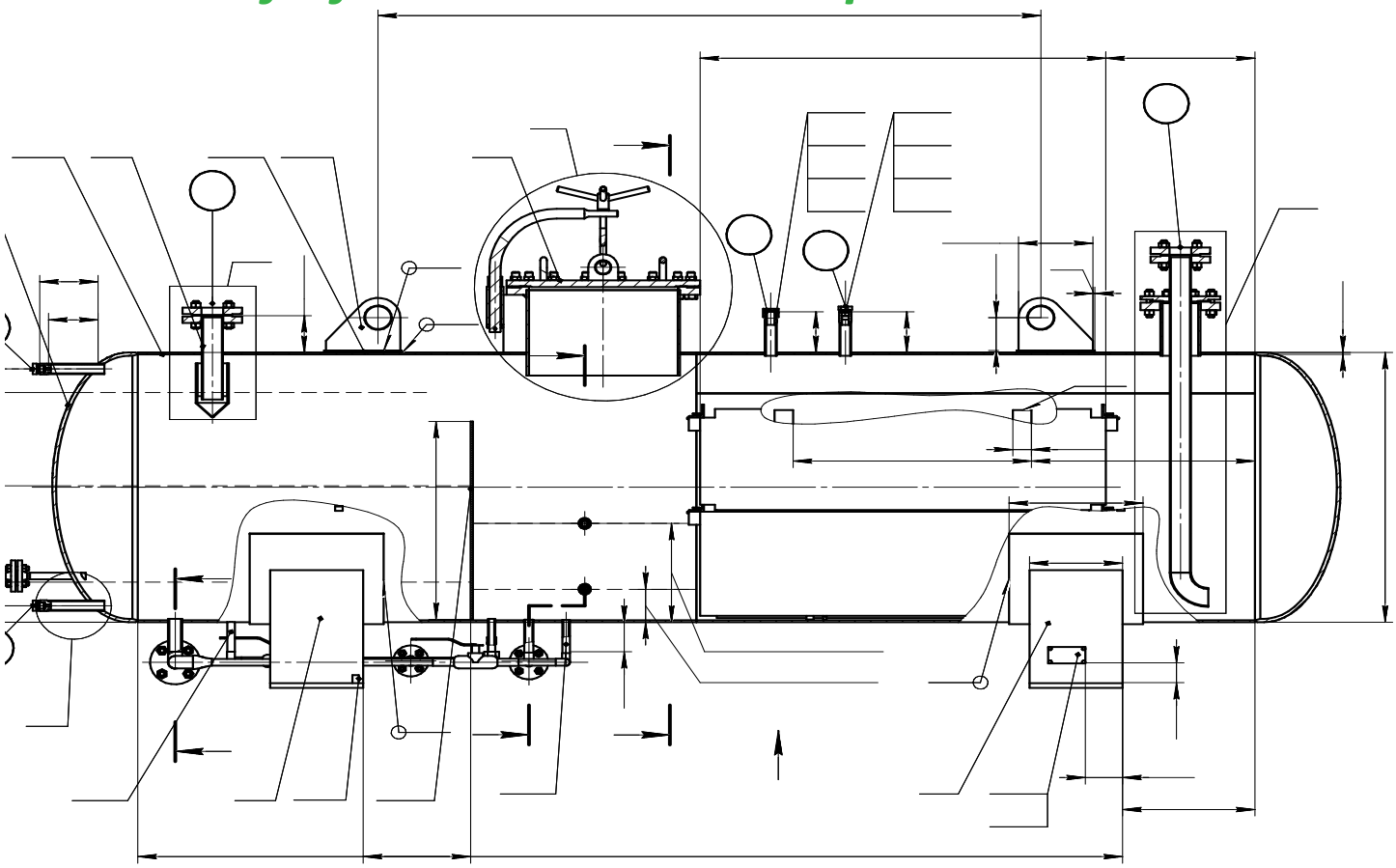

NGT Global AG and NGT Synthesis-North America, Inc.

www.ngt-synthesis.com

Table of Contents

Introduction

NGT group of companies is developing and commecializing Methaforming technology for producing high octane gasoline or valuable petrochemical feedstock.

The group owns a portfolio of patents and patent applications covering Australia, Brazil, Canada, China, India, Saudi Arabia, the USA, 38 countries of the European Patent Organization, and 8 countries of the Eurasian Patent Organization.

Methaforming is a high value-added technology for processing low-octane naphthas into a high-octane gasoline or an aromatic concentrate (BTX).

The equipment and technology supplied by us and our EPC partners for the production of high-octane gasoline for small-scale refineries has the following advantages:

- block-modular design for easy transportation and quick installation;
- 100% factory readiness of supplied equipment to reduce the duration of plant commissioning;
- full process automation for greater safety and consistency.

Name

Methaforming-6 ("M-6") Unit with nameplate capacity of 17.1 tons (150 barrels) of naphtha feedstock per day (6 000 tons per year, 8 400 hours plant operating time per year).

Intended Use

The unit is designed to make a high-octane motor gasoline blendstock by joint processing of two components:

1. Straight-run gasoline, gas condensate and similar types of naphtha feedstocks, and
2. methanol, ethanol, other oxygenates and their mixtures.

The resulting products are:

- High-octane gasoline blendstock (Methaformate). The yield of Methaformate usually ranges between 79 and 85% of the hydrocarbon feed. Methaformate's RON is typically in the 89-95 range;
- LPG;
- fuel gas.

Material Balance

Table 1. Sample material balance of the unit (feed supplied by a customer).

Feed			Product		
Composition	Kg/hr	% by weight	Composition	Kg/hr	% by weight
Straight-run gasoline	714.3	80.9	Unstable Methaformate	576.4	65.2
			LPG and fuel gas*	205.6	23.3
Methanol grade A	169.1	19.1	Desalinated reaction water	92.6	10.5
			RF&L	8.8	1.0
Total:	**883.4**	**100.0**	**Total:**	**883.4**	**100.0**

The main product of the *M-6* is methaformate (reformate); sample qualities are shown in Table 2. The specifications are for a case with no sulfur in the feed. If the feed does contain sulfur, about 90% of it is removed as H_2S, and the rest will remain in the Methaformate.

Table 2. Typical qualities of unstable Methaformate from straight-run gasoline.

Indicator	Naphtha**	Methaformate
Boiling range, % vol. evaporated at temperatures:		
70°C (158°F)	25	35
100°C (212°F)	55	50
150°C (302°F)	90	94
Final boiling point,°C same, °F	166 331	196 385
Saturated vapor pressure SVP, kPA same, psi	52 7.5	100 14.5
Relative Density, kg/L	0.71	0.74
RON MON	62.7 61.5	93.0 84.8
n-paraffins, % vol.	28.31	14.84
iso-paraffins, % vol.	36.60	36.14
naphthenes, % vol.	20.43	12.97
olefins, % vol.	0.53	1.78
aromatics, % vol.	14.13	34.27
incl. benzene, % vol.	1.74	no more than 1.5

* If the feed contains sulfurous compounds, about 90% of the sulfur will end up in the gas.

** In this document, "naphtha" means a mixture of hydrocarbons with the composition, density and boiling range of naphtha, regardless of its origin (including straight run gasoline, condensate, cracked naphtha, GTL naphtha, etc.

Product yields and the chemical composition of the products of the unit can vary widely in response to the changes in the feed and the process conditions. Knowing the composition and prices of the feeds, and the expected prices of the products of the unit, we can advise you on the choice of feed, suggest optimal operating conditions and forecast the expected product yields.

The qualities of Methaformate are usually quite close to RON-92 gasoline. Upon stabilization, the Methaformate, contingent on the qualities of the feed, usually meets all or most of the requirements of the EU and the US gasoline standards. An accurate forecast of the specifications of the products of the unit can be made after testing your intended feed in our lab.

The reformate has a light lemon color, pleasant smell without signs of the presence of mercaptans or hydrogen sulfide.

After stabilization, the Methaformate is suitable as a blendstock for premium gasoline.

The main component of the off-gas is a mixture of propane and butane. The off-gas is isolated from other products in the three-phase separator of the “Methaforming-6”.

Like with Methaformate, the composition of the gas can vary depending on the qualities of the feed and on the process conditions. This gas can contain hydrogen, methane, ethane, water vapour and other components. If the feed contains sulfurous components, the off-gas will most likely contain hydrogen sulfide.

The off-gas is suitable for use as a fuel for heating the feedstock.

A sample composition of the fuel gas (at a pressure of 8 atm and temperature of 38 °C in a three-phase separator) is given in Table 3.

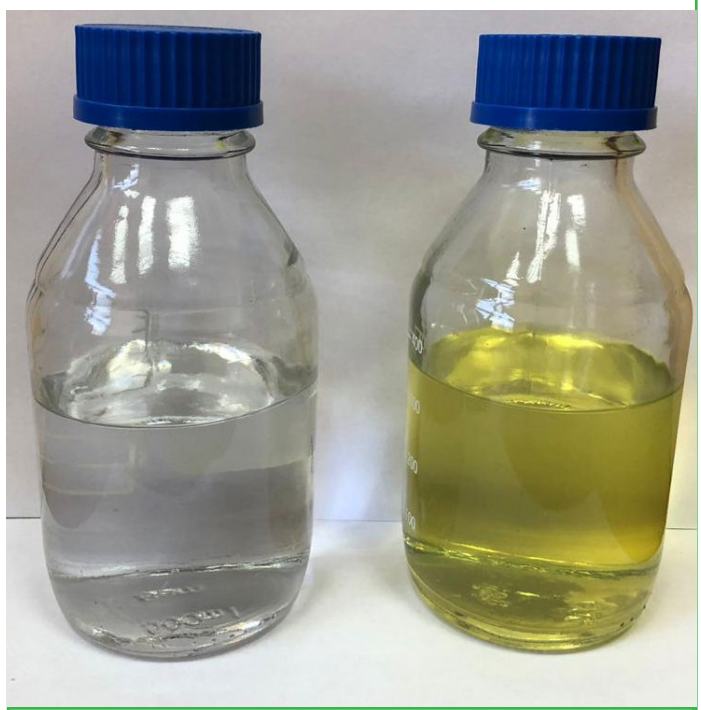

Straight run gasoline (feed, left) and Methaformate (product, right).

The sample is for a case of processing a feed with no sulfur content; should sulfur be present in the feed, about 90% of it will be found in the off-gas (more on this in the Process Description).

Table 3. Sample composition of fuel gas leaving the three-phase separator.

Component	% wt.
H_2	0.91
H_2O	0.95
C1-C2	1.12
C3	19.05
C4	54.55
C5+	23.42
Total :	**100.0**

The small scale of M-6 does not justify the added cost of recovering the C3-C5 hydrocarbons from the fuel gas and finding an alternative source of furnace fuel. However, should the economics of such recovery be favorable in a specific market, the recovery as such does not present a technical difficulty.

Technical Specifications

The nominal capacity of the M-6 unit is as follows:

- Hydrocarbon feed, e.g. straight-run gasoline, density of 720 kg/m³.....6 000 ton/yr (150 bpd)
- Methaformate produced .....4 800 ton/yr (116 bpd)
- Permissible load deviation .....-30...+0%.

Table 4. Technical specifications of the unit.

Indicator	Unit	Value
Maximum pressure (gauge): • heat exchangers • feed preheater • the reactor, HDA, storage tank, condenser, air-cooled heat exchanger	kgf/cm² (PSI)	10 (142) 10 (142) 10 (142)
Climatic operating conditions: • temperature • relative humidity	°C °F %	-40...+45 -40...+113 0...100
External power supply parameters	-	50 Hz 3 phase 380V
Installed electric power	kW	Up to 10
Fuel for heating feedstock	-	Off-gas from the unit itself. LPG for start-up
Fuel consumption for heating the feed	kg/hr	~15...20
Total weight, not more than	tons pounds	20 44 100
Staff per shift	persons	1
Lifetime	years	12
Turnaround cycle	years	1

Feed

Typical feed for the M-6 unit is a combination of two streams:

1. Straight-run gasoline (virgin naphtha), obtained from the atmospheric distillation of crude oil, or gas condensate. One can also use hydrocrabon feeds of another origin if they have a similar composition. The share of this feed stream is 70 до 85% by weight, depending on the process conditions that are driven by the required product specifications and local feed and product prices.
2. Methanol, ethanol or another oxygenate or a mixture of oxygenates. The share of this feed stream is 15 to 30% by weight.

Table 5. General requirements to hydrocarbon feed*.

Indicator	Unit	Recommended Value	Critical permissible value	Consequences of exceeding recommended values
Sulfur content	mg/kg, ppm wt.	not more than 100	not more than 500 (1 000)	100-500 – more frequent regenerations; 500-1000 – additional desulfurization.
Fractional composition:				
Evaporated at 70°C (158°F)	% vol.	not more than 15	--	Lower yields of the gasoline product
Final boiling point (FBP)	°C (°F)	not more than 180°C (356°F)	not more than 200°C (392°F)	Higher FBP of the gasoline product; more frequent regenerations
Saturated vapor pressure	kPa psi	not more than 80 14.5	--	Lower yields of the gasoline product
Solvent-washed gum content	mg /100 cm^3	not more than 5	--	Elevated gum content in the product; more frequent regenerations
Lead content	mg/L	none	--	Presence of lead in the product
Benzene content	% wt.	2.0	--	Elevated benzene content in the gasoline product
Research octane number (RON)		not less than 56	--	Lower octane values of the final product
Appearance		Visually free from undissolved water, sediment, and suspended matter		

* The requirements to hydrocarbon feed are presented here in a condensed form, for the most frequently encountered feeds (condensate, virgin naphtha). Additional requirements may be important for feeds of other origins, e.g. it may be necessary to check for the levels of nitrous, chlor-organic compounds, heavy metals, etc. In any case, a decision on the suitability of a certain feed for Metha-forming process should be taken in consulation with our experts.

The Methaforming process has been successfully used to process the following hydrocarbon feeds:

- straight-run gasolines (virgin naphthas),
- gas condensates,
- raffinates from aromatics removal units,
- light FCC naphthas (with 20-25% wt. of olefins),
- benzene-rich naphthas (up to 10% vol. of benzene in the feed),
- narrow fractions of C6-C7 hydrocarbons (boiling range 60-85°C),
- light naphthas and solvents (up to 30%vol. of C5 components), including those of synthetic origin (e.g. the products of Fischer-Tropsch process).

This list is not exhaustive. If a feed meets the requirements of Table 5, then it can be a candidate for Methaforming regardless of its origin. A decision regarding non-conventional hydrocarbon feeds may require detailed information on their composition, including various impurities and catalytic poisons. The yields and qualities of the products of Methaforming depend on the qualities of the feeds and if non-conventional feeds are used, the results may differ significantly from the results of processing typical virgin naphthas.

Methanol is a typical oxygenate for the Methafoming process. However, the process can be modified to accept ethanol, mixtures of alcohols and simple ethers (including dimethyl ether), and alcohol-water mixtures as the co-feed. The process can accept methanol and ethanol solutions with up to 50%vol. of water. We can also assess the possibility of using industrial byproducts with high methanol or ethanol content as co-feeds to Methaforming process.

The Methaforming process is tolerant to wide variations in the hydrocarbon and oxygenate feeds. Knowing the composition of the available feeds, their prices, and the prices of the potential products, we will be happy to assist you in selecting optimal combinations of the feeds and the process conditions to meet your specific requirements.

Catalyst

The Methaforming process requires our proprietary catalyst. The catalyst is based on a zeolite of the pentasil group and is used in a fixed-bed reactor.

The catalytic activity decreases during the operation of the plant, and therefore the catalyst is periodically (aprox. once every 2-4 weeks depending on the feed) regenerated by feeding a heated nitrogen-air mixture into the reactor.

The catalyst has a service life of 3 to 4 years under appropriate operating and regeneration conditions.

Methaforming catalyst

Methaforming 6: CAD Representations

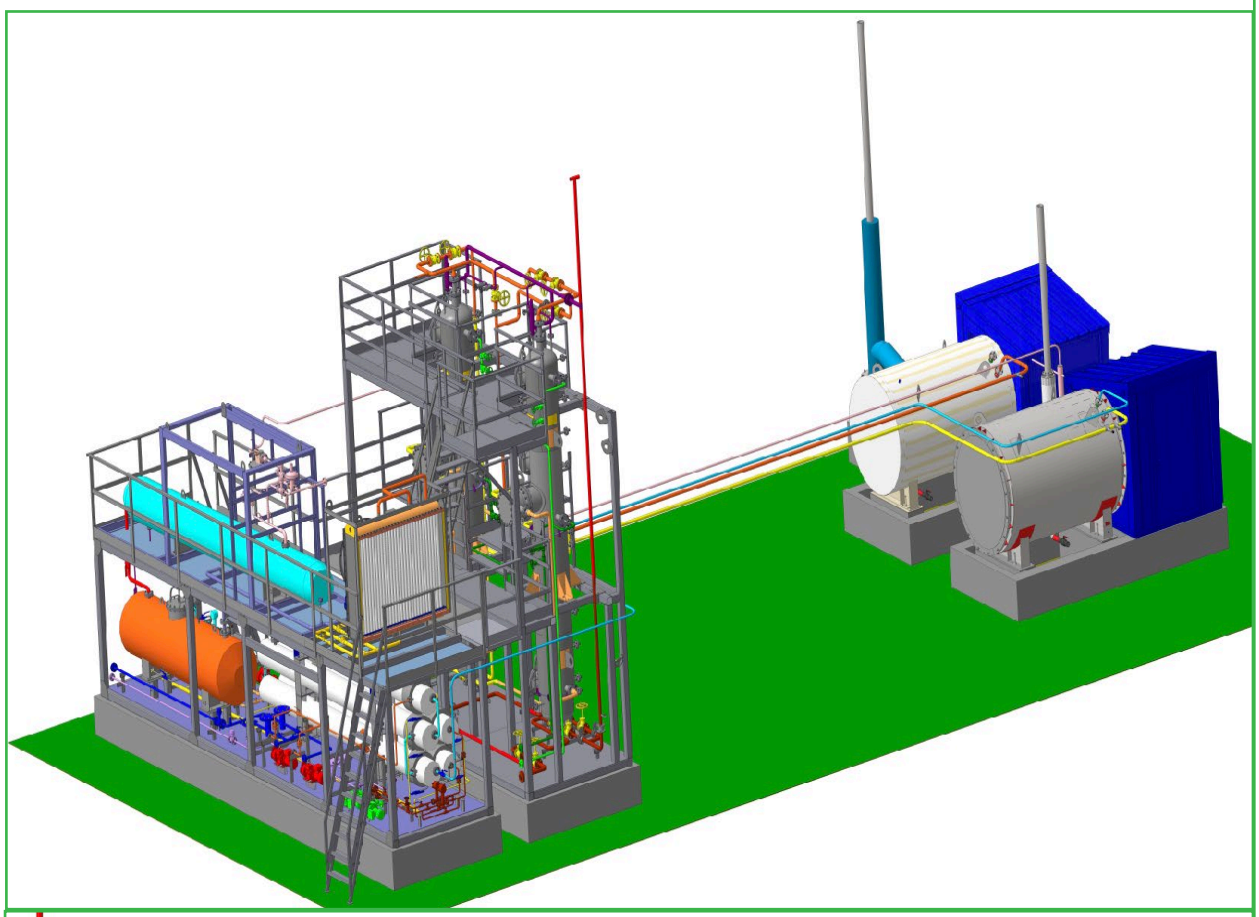

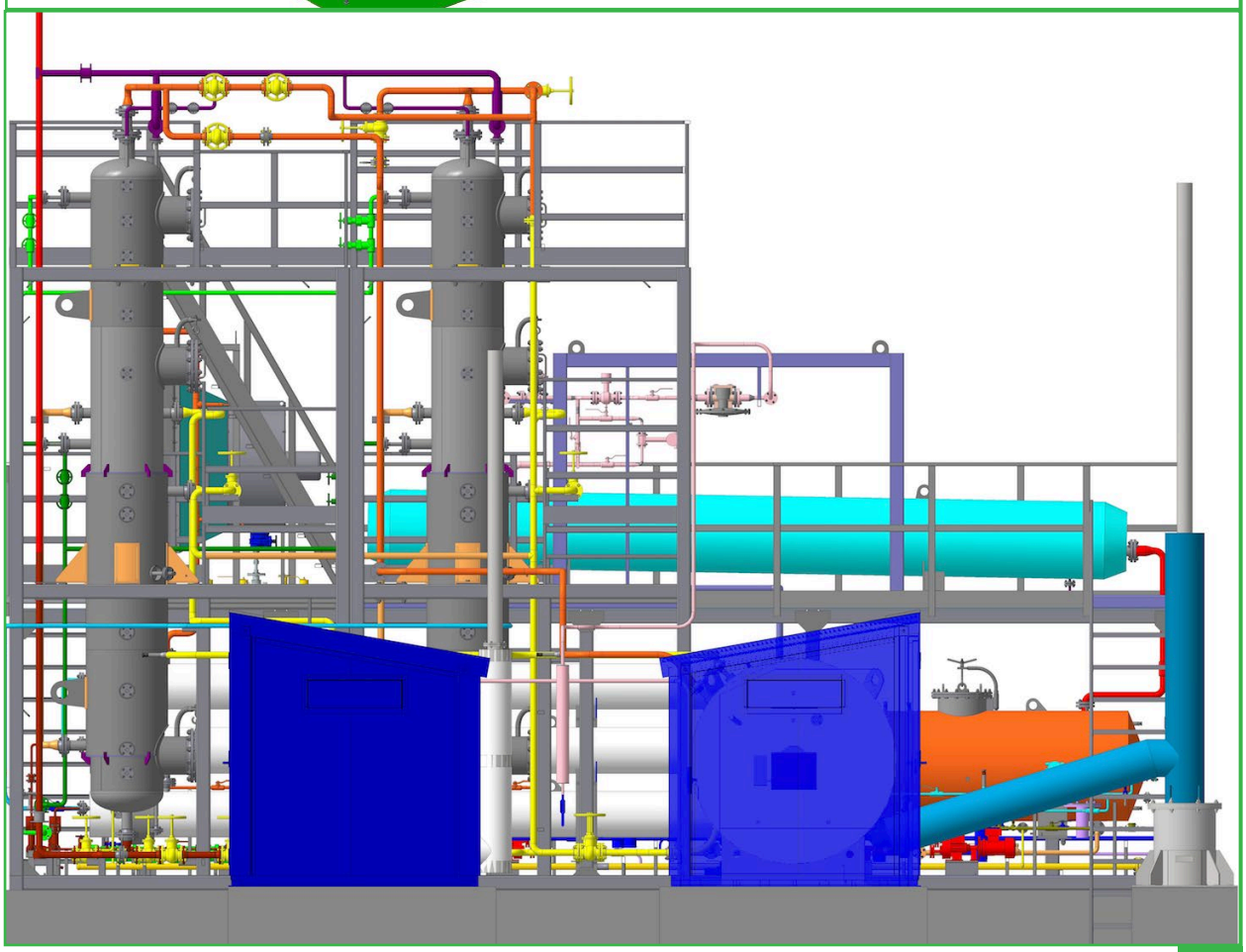

Process Description (see PFD on the facing page)

The hydrocarbon feed (naphtha) is fed to the plant from the feed tank* by pump P-1 at a pressure of 0.6 MPa. The oxygenate (methanol) is supplied from the dedicated feed tank* with the same pressure by pump P-2. Methanol, in contrast to naphtha, which flows as a single stream, enters the methanol collector, from which it is fed with the required flow rates to the appropriate beds of the reactor.

The naphtha and methanol streams enter the valve assembly, consisting of flow meters and control valves. The flow rate of methanol for each stage is regulated by a control valve according to the flow meter readings. The naphtha stream enters furnace F-1 via recuperative heat exchanger HE-3, heats up to ~450°C, which is somewhat higher than the reaction temperature (~360°C). This excess heat is used to heat the reactor through an integrated interstage heat exchanger and a heating jacket. These solutions, available due to the small scale of the unit, provide the unit operator with additional flexibility.

On their way to the reactor, the Methanol streams pass through recuperative heat exchangers HE-1 and HE-2, where they are completely evaporated by the heat from the product stream leaving the reactor.

The heated feed streams reach the reactor shelves, where the methaforming reactions occur. The reactor has a two-shelf construction with the inter-stage heating mentioned above. The temperature in the catalyst bed is measured at different points of each reactor shelf, and the pressure drop is measured on each shelf of the reactor.

The product mixture successively passes from the reactor through the recuperative heat exchangers HE-1 and HE-2 for methanol preheating. After releasing part of the heat to methanol, the product stream enters the recuperative heat exchanger HE-3, heats the naphtha feed stream, and then enters the air-cooled heat exchanger (AHE) where it is cooled to a temperature of ~45°C; a partial condensation occurs.

The Methaformate is pumped from the three-phase separator TPS by pump P-3 to a tank farm*, while water is transported by gravity to a recycling facility* or its further use (e.g. in a crude desalter). The M-6 in this basic version does not include a stabilization column for the stabilisation of methaformate. The flash gas consisting mainly of C3-C4 hydrocarbons enters tank T-6, from where it is taken as fuel gas for furnaces F-1 and F-2. Excess gas, if any, is discharged to a flare.

The catalyst is periodically regenerated by oxydation (burning off) of the coke crust. For this, a mixture of nitrogen and air is preheated in F-2 to 450-550°C and then fed into a reactor. The gases from coke burn are discharged to the flare.

During Methaforming, the total sulfur content in the gasoline is reduced by about 10x due to the conversion of mercaptans and disulfides to hydrogen sulfide in the presence of excess hydrogen that is formed in the process. The sulfur removed from the Methaformate converts to hydrogen sulfide which is concentrated in the fuel gas.

In view of this, in order to use the fuel gas from the Methaforming plant for domestic needs, it may be necessary to further desulfurize it to meet the prevailing standards. If the fuel gas is to be used as an industrial fuel, for example, for a boiler house, such cleansing may not be required.

---

* Outside of the scope of supplied or designed equipment.

Process Flow Diagram of *Methaforming-6*

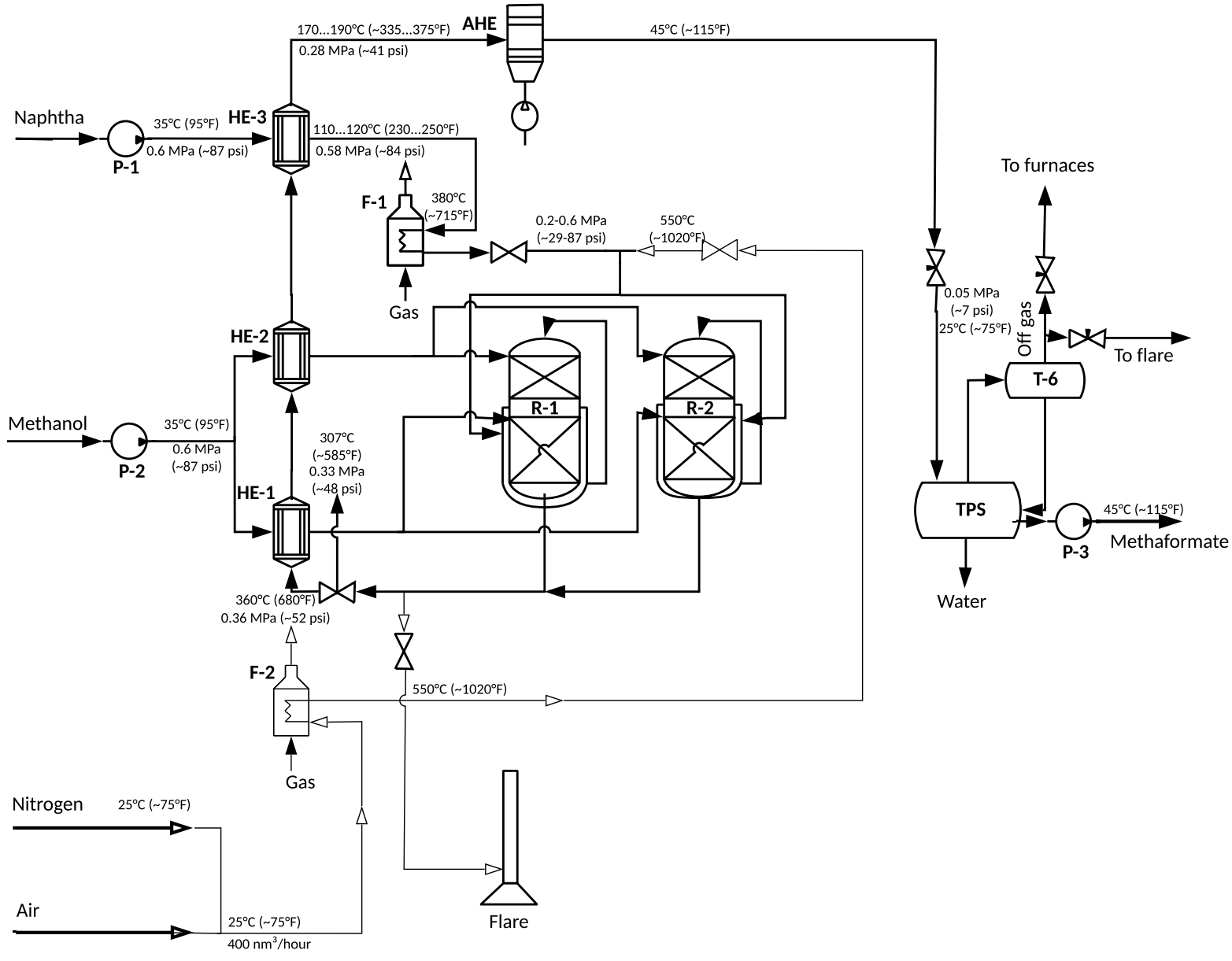

Engineering Solutions

Reactors R-1, R-2 are the main equipment of the plant. The reactor design allows the plant to operate under optimal conditions both in production and the regeneration modes. The reactors are made from stainless steel A316L or similar.

Furnaces F-1, F-2 provide the M-6 unit with the necessary amount of heat. Both furnaces have two chambers, i.e. heat transfer from burner takes place in the radiant chamber, while additional heat from the flue gas to the feed is transferred in the convective chamber. The furnaces are equipped with automatic burners with a view to minimize the emissions.

Three-Phase Separator (TPS) allows for the separation of methaformate from gas and water.

Pumps P-1, P-2 and P-3 create the required pressure to supply the feed and move the products of the Methaforming plant. Most of the pumps are of diaphragm type. All pumps have frequency controlled asynchronous electric motors. A methaformer of a larger scale may use a different type of pumps.

Heat Exchangers (HE) ensure recuperative heat transfer, saving over 40% of the heat supplied to the unit. The heat exchangers used in the Methaforming-6 plant are shell-and-tube heat exchangers with a floating head.

Automated Process Control System (APCS). The M-6 plant is equipped with automated process control system which keeps process parameters in the prescribed range. The APCS registers the parameter values, flags the deviations from the preset values, and ensures an automatic emergency shutdown of a part or the whole unit if needed.

Environmental Considerations

Excess fuel gas and possible discharges from emergency valves are diverted to a closed flare and burned.

The concentration of solids and hydrocarbons in wastewater is reduced by treating the wastewater at local treatment facilities (the facilities are not supplied as part of the unit).

The reaction water is a product of chemical conversion of methanol and typically contains about 50 ppm of hydrocarbons. It can be used, for example, as crude desalter water.

The spent catalyst from the plant is inert and could be sent to landfill upon neutralization.

The main means of protecting the environment from the harmful effects of hydrocarbons is the use of sealed equipment in the process. The number of detachable connections is minimized. The content of hydrocarbons in the air is constantly monitored by the gas analyzer.

If no detectable sulfur is present in the feed, the products of the M-6 unit cannot form toxic compounds in the presence of other substances in air or wastewater at ambient temperature. The detailed design should prevent the escape of petroleum products into domestic and storm sewers as well as into open water bodies. If the feed of the unit contains sulfur, then depending on its quantity and applicable regulations, additional measures may be required to protect the environment.

Industrial Safety and Design Standards

The original packet of engineering documentation for M-6 was drawn according to the Russian (GOST) standards. The list of these standards is readily available upon request.

We are now working with an EPC partner to develop a similar documentation packet for the North American market (ASTM-compliant). At the time of the publication this work is in progress.

Documentation

We furnish the Buyer with the following documentation:

1. Installation drawings with static and dynamic loads on the foundation, including the values of the loads, points of action, and the location pattern of the anchor bolts;
2. Installation instructions;
3. Technological regulations;
4. Technical certificates for all the components and assemblies;
5. Construction certificates for the relevant units of equipment and the plant as a whole;
6. Operating manual, including the wiring, power supply and process flow diagrams;
7. General arrangement drawing with dimensions and complete specification of the units of the plant;
8. Certificates of compliance for parts and assemblies.

Scope of Supply

1. Basic Equipment

All the equipment necessary for the operation of the plant, as shown in the process flow diagram, is included in the scope of supply. The equipment specified in this document has already been successfully used in other projects. The parts in contact with the product have a high corrosion resistance. A special anticorrosive treatment of external metal surfaces is also carried out. Surface colors are chosen in coordination with the Customer.

2. Pipes and Fittings

All necessary pipes and fittings within the boundaries of the plant are included in the scope of supply.

3. Electric Equipment and Instrumentation

The scope of supply contains all the instrumentation necessary for its operation within the boundaries of the plant.

The plant is controlled centrally from the operator's console using programmable controllers. Control cabinets are located in a room where the Buyer has a power cable with a switchgear.

Control and power cables for a standard distance from the plant to the control room are included in the scope of supply.

Fire alarm with fire and smoke sensors.

REMOTE I/O Data Transfer System configured to Customer requirements.

4. Scope of Services

The scope of services supplied with equipment includes:

- construction interface drawings (layout of equipment and foundations);
- supervision over installation of equipment within the scope of supply;
- starting up the equipment within the scope of supply;
- training and consultation of Customer's personnel on the operation of the plant;
- commissioning testing, jointly with the Customer.

5. Standards

The calculations, design, and manufacturing of the plant are carried out by our EPC partner on the basis of the rules and regulations currently in force in the location agreed with the Customer.

6. Exclusions from the Scope of Supply

The scope of supply does not include the following:

- Plant tie-in design;
- Any tanks and containers for storage of the feeds, products, reagents, including intermediate, emergency, etc.;
- Pipes and fittings, fasteners from the storage facility to the flanges of the plant;
- Pipeline supports and cable racks both within and outside the plant;
- Pipeline and cable trestles and trays both within and outside the plant;
- Any foundations, concrete- and brick-work, buildings (either temporary or permanent);
- Any lubricants, cooling materials, heat transfer media, reagents, feeds and fuel necessary for the operation of the plant, its maintenance and repair;
- Any protective equipment, devices and auxiliaries, protective clothing;
- Any equipment, instruments and auxiliaries for cleaning or neutralizing wastewater, gas discharges and solid wastes;

6. Exclusions from the Scope of Supply (continued)

- Installation of equipment, pipelines, fittings, insulation, painting and materials, auxiliary equipment outside the scope of supply of the plant, assembly, hoisting and lifting equipment;
- Power supply, heating, ventilation and air conditioning, fire protection (except for detectors and alarms), lighting, grounding and lightning protection equipment;
- Fire extinguishing, video surveillance and security alarm systems, telephone communication;
- Furniture and other equipment for the operator room and analytical laboratory;

Lifting and hoisting equipment is outside of the scope of supply; it may be specified by the tackle points and acquired by the Customer directly.

The catalyst is supplied under a separate agreement with the Licensor.

The M-6 Plant in this basic configuration does not include a stabilization column for the Methaformate, a desulfurization unit, and a gas flare.

Commercial Terms

We recommend to start the process by sending us the composition of your intended feeds, so that we can forecast the yields of the products and discuss the expected economics of the plant with you. In cases of unusual feeds, we recommend testing the intended feed in our laboratory before making investment decisions.

The plant is delivered as five standard 40-ft shipping containers. The block-modular approach to plant design allows to:

- transport modules on standard railway platforms;
- shorten construction time;
- improve equipment reliability.

The plant delivery time is 6 months from the date of receipt of the advance payment and the necessary set of initial data from the Customer.

At the time of the publication, the cost of the plant and the services within the scope of supply was ca. $ 1 million FOB port Novorossiysk (Black Sea). Please inquire about the most recent price.

The payment schedule for the M-6 plant:

- 50% of the contract price – advance payment for the order of long-lead equipment, basic and auxiliary equipment, automated process control system, assembly of the plant;
- 35% of the contract price - upon notification of the Customer of the availability of the equipment for shipment;
- 15% of the contract price - upon commissioning of the plant.

Methaforming - 6

Processing Unit for up to 6 000 tpa (150 bpd) of Hydrocarbon Feed

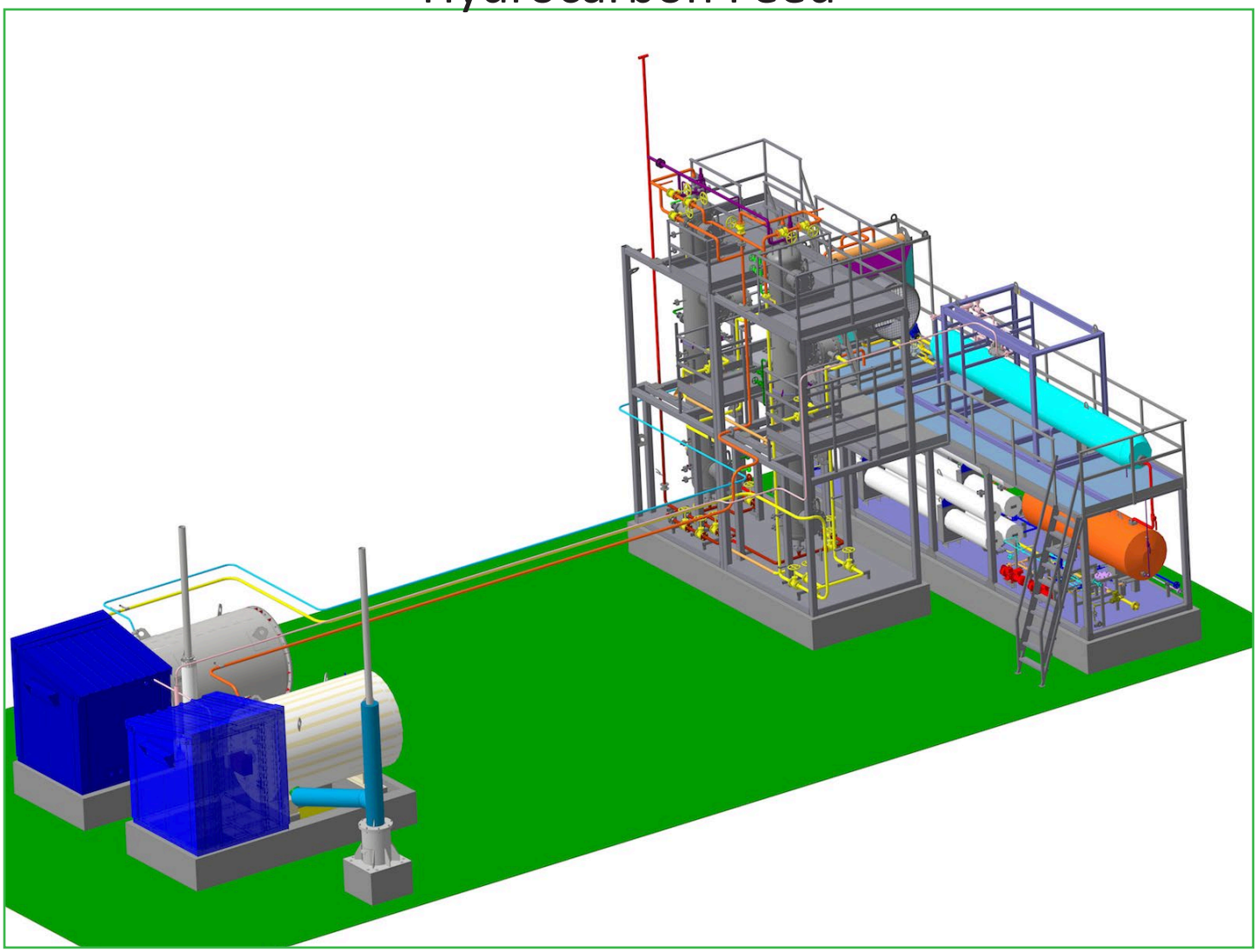

- **Upgrade a wide range of naphthas**
- **Delivery within 4-6 months**
- **Delivered pre-assembled**

NGT Global AG and NGT Synthesis-North America, Inc.

www.ngt-synthesis.com

ngt new gas technologies Synthesis